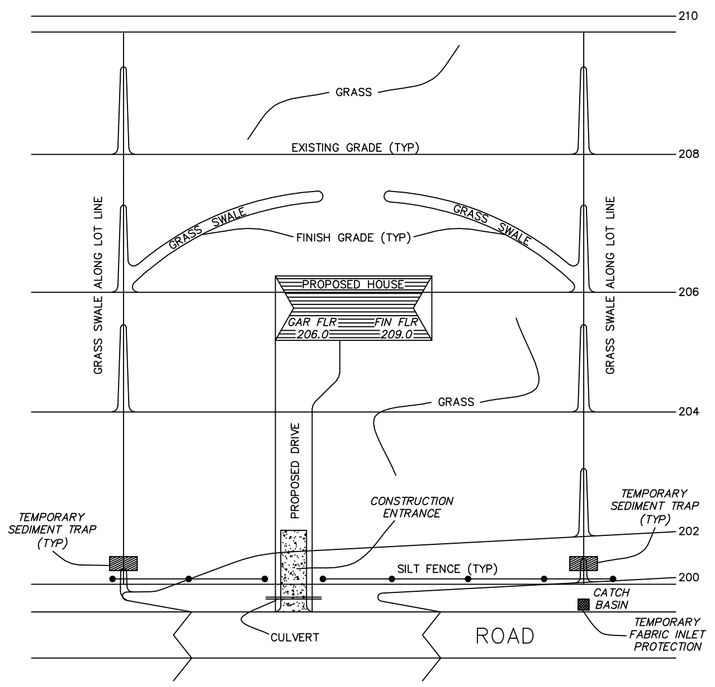

TYPICAL E&SC PLAN FOR INDIVIDUAL RESIDENTIAL LOT

NTS

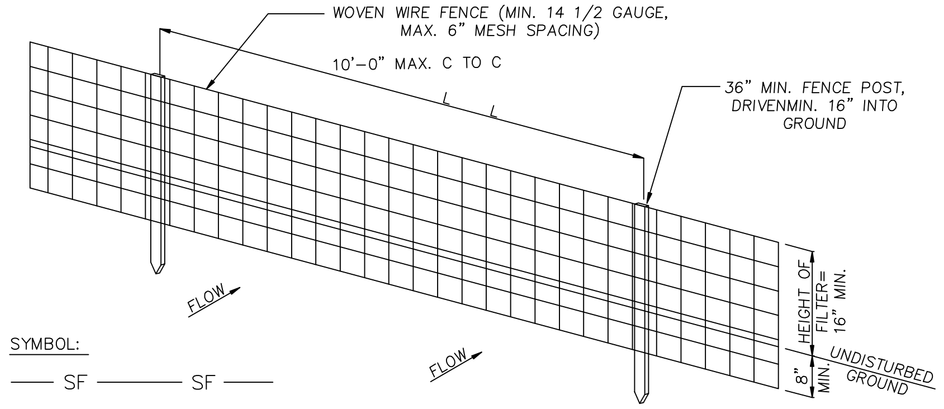

SYMBOL:

—— SF —— SF ——

PERSPECTIVE VIEW

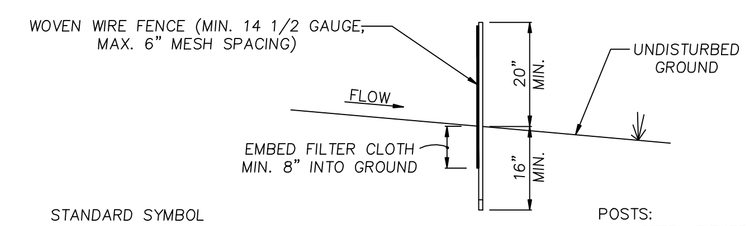

STANDARD SYMBOL

——S——S——S——

SECTION

POSTS:
STEEL EITHER T OR U TYPE OR 2" HARDWOOD WOVEN WIRE, 14 1/2 GA. 6" MAX. MESH OPENING

FILTER CLOTH:
FILTER X, MIRAFI 100X, STABI-LINKA T140N OR APPROVED EQUAL.

PREFABRICATED UNIT:
GEOFAB ENVIROFENCE, OR APPROVED EQUAL

NOTES:

1. WOVEN WIRE FENCE TO BE FASTENED SECURELY TO FENCE POSTS WITH WIRE TIES OR STAPLES.
2. FILTER CLOTH TO BE FASTENED SECURELY TO WOVEN WIRE FENCE WITH TIES SPACED EVERY 24" AT TOP AND MID SECTION.
3. WHEN TWO SECTIONS OF FILTER CLOTH ADJOIN EACH OTHER THEY SHALL BE OVER- LAPPED BY SIX INCHES AND FOLDED.
4. MAINTENANCE SHALL BE PERFORMED AS NEEDED AND MATERIAL REMOVED WHEN "BULGES" DEVELOP IN THE SILT FENCE.

FABRICATED SILT FENCE

N.T.S.

SCHEDULE A	
LENGTH OF SERVICE CONNECTION (MAIN TO BUILDING)	MINIMUM INSIDE DIAMETER OF SERVICE-COPPER TYPE K
0' – 75'	3/4" I.D.
75' – 200'	1" I.D.
OVER 200'	SIZE TO BE DETERMINED BY DEVELOPER'S PROFESSIONAL ENGINEER

LOT 2 – 550' LENGTH – 1.5" COPPER OR 1.25" HDPE
LOT 2 – 385' LENGTH – 1.25" COPPER OR 1.25" HDPE
IF HOUSE LOCATION CHANGES CONSULT ENGINEER

TABLE-MAXIMUM TAP SIZE FOR DIP

MAIN SIZE-INCHES	4	6	8	10	12 & LARGER
MAX TAP SIZE-INCHES	3/4	1	1-1/4	1-1/2	2

UNLESS APPROVED BY TOWN OF MOREAU

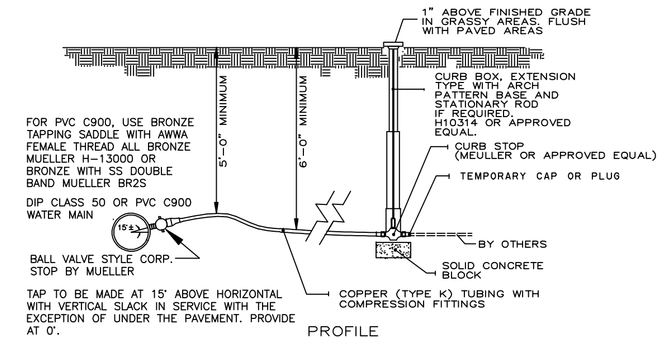

PROFILE

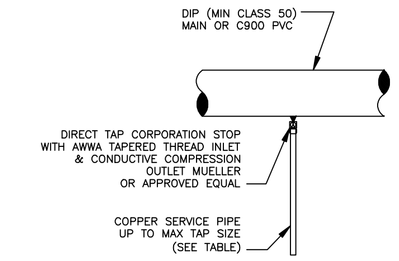

PLAN

SERVICE CONNECTION DETAIL

N.T.S.

WATER SERVICE CONNECTON NOTES

1) ALL PIPE MATERIALS AND APPURTENANCES ARE SUBJECT TO APPROVAL BY THE MOREAU WATER SUPERINTENDENT.

2) THE CONTRACTOR SHALL VERIFY SIZE, TYPE HORIZONTAL AND VERTICAL LOCATION OF THE MAIN AT THE PROPOSED CONNECTION POINT(S) PRIOR TO CONSTRUCTION. CONFLICTS WITH OTHER UTILITIES TO BE CONSTRUCTED ARE TO BE AVOIDED. DISCREPANCIES OR CONFLICTS WITH EXISTING UTILITIES SHALL BE REPORTED TO THE WATER SUPERINTENDENT IMMEDIATELY.

3) MINIMUM WATER SERVICE DEPTH (TOP OF PIPE TO FINISH GRADE) SHALL BE 5'-0".

4) ALL FILL BELOW WATER SERVICES SHALL BE COMPACTED GRANULAR MATERIAL (MIN 95% MODIFIED PROCTOR TYP).

5) ALL TRENCH BACKFILL SHALL BE MECHANICALLY COMPACTED TO PREVENT SETTLEMENT. TOP TRENCH WITH 12" MIN. APPROVED GRAVEL IN PAVED AREAS AND ALONG SIDE OF EXISTING ROAD FOR SHOULDER BASE. REPLACE DAMAGED PAVEMENTS WITH LIKE KIND AND LIKE THICKNESS.

6) CURB BOXES ARE TO BE INSTALLED SO THAT CAPS EXTEND ABOVE FINISHED GRADE 1" AND IDENTIFIED WITH 2x4 LUMBER MARKER IN GRASSY AREAS. IN PAVED AREAS, USE TWO PIECE CURB BOX CAP (W/PENTAGONAL PLUG) AND CAST IRON CURB BOX SLEEVE TO ALLOW ADJUSTMENT OF THE GROUND KEY LID (MUELLER H-10342 OR APPROVED EQUAL).

7) IT WILL BE THE CONTRACTORS RESPONSIBILITY TO ADHERE STRICTLY TO ALL RELEVANT NYS OSHA LABOR SAFETY STANDARDS INCLUDING, BUT NOT LIMITED TO, THOSE RELATING TO CONSTRUCTION SAFETY AND TRENCH SHORING.

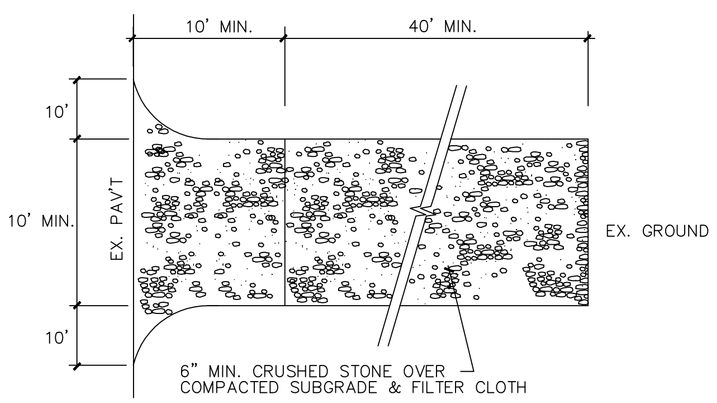

CONSTRUCTION SPECIFICATIONS:

1. STONE SIZE – USE 2" STONE, OR RECLAIMED OR RECYCLED CONCRETE EQUIVALENT.
2. LENGTH – AS REQUIRED, BUT NOT LESS THAN 50' (EXCEPT ON A SINGLE RESIDENCE LOT WHERE A 30' MINIMUM LENGTH WOULD APPLY).
3. THICKNESS – NOT LESS THAN 6".
4. WIDTH – 10' MINIMUM, BUT NOT LESS THAN THE FULL WIDTH AT POINTS WHERE INGRESS OR EGRESS OCCURS.
5. FILTER CLOTH – WILL BE PLACED OVER THE ENTIRE AREA PRIOR TO PLACING OF STONE. FILTER WILL NOT BE REQUIRED ON A SINGLE FAMILY RESIDENCE LOT.
6. SURFACE WATER – ALL SURFACE WATER FLOWING OR DIVERTED TOWARD CONSTRUCTION ENTRANCE SHALL BE PIPED ACROSS THE ENTRANCE. IF PIPING IS IMPRACTICAL, A MOUNTABLE BERM WITH 5:1 SLOPES WILL BE PERMITTED.
7. MAINTENANCE – THE ENTRANCE SHALL BE MAINTAINED IN A CONDITION WHICH WILL PREVENT TRACKING OR FLOWING OF SEDIMENT ONTO PUBLIC RIGHTS-OF-WAY. THIS MAY REQUIRE PERIODIC TOP DRESSING WITH ADDITIONAL STONE AS CONDITIONS DEMAND AND REPAIR AND/OR CLEANOUT OF ANY MEASURES USED TO TRAP SEDIMENT. ALL SEDIMENT SPILLED, DROPPED, WASHED OR TRACKED ONTO PUBLIC RIGHTS-OF-WAY MUST BE REMOVED IMMEDIATELY.
8. WASHING – WHEELS SHALL BE CLEANED TO REMOVE SEDIMENT PRIOR TO ENTRANCE ONTO PUBLIC RIGHTS-OF-WAY. WHEN WASHING IS REQUIRED, IT SHALL BE DONE ON AN AREA STABILIZED WITH STONE AND WHICH DRAINS INTO AN APPROVED SEDIMENT TRAPPING DEVICE. 9. PERIODIC INSPECTION AND NEEDED MAINTENANCE SHALL BE PROVIDED AFTER EACH RAIN.

STABILIZED CONSTRUCTION ENTRANCE

NOTE: ALL POINTS OF CONSTRUCTION INGRESS OR EGRESS SHALL BE MAINTAINED TO PREVENT TRACKING OR FLOWING OF SEDIMENT OR DEBRIS ONTO A PUBLIC ROAD OR ON THE PAVED AREAS OF THE SITE.

N.T.S.

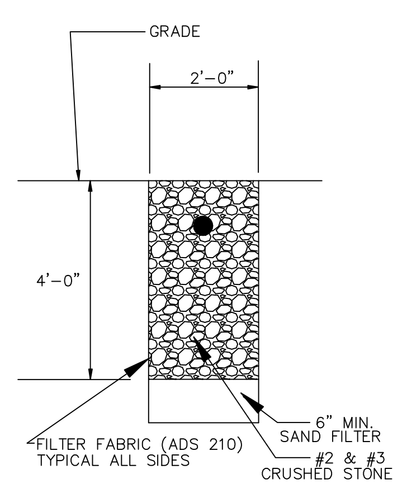

INFILTRATION TRENCH DETAIL

NTS

ENVIRONMENTAL NOTES:

1. PLANT GRASS SEED ON CUT AND FILL SLOPES TO PREVENT EROSION.
2. PLANT GRASS SEED ON ALL R.O.W. NOT COVERED BY ROADS, INCLUDING FERTILIZER AND MULCH.
3. STEPS SHALL BE TAKEN BY THE CONTRACTOR TO PREVENT TRACKING OF MUD ON MUNICIPAL STREETS. ANY TRACKING MUST BE CLEANED IMMEDIATELY.
4. PROVIDE PROTECTION FOR TREES THAT ARE INTENDED TO BE PRESERVED.
5. HAY BALES, SILT FENCES AND COMBINATIONS THEREOF SHALL BE UTILIZED WHERE REQUIRED TO PREVENT EROSION OF GRADES/SLOPES AND THE MIGRATION OF SILT, OFF SITE. THESE MEASURES SHALL BE IN PLACE WHERE SHOWN ON THE SITE PLANS AND WHERE DIRECTED BY THE PROJECT ENGINEER DURING CONSTRUCTION.
6. HAY BALES / SILT FENCE SHALL BE UTILIZED TO PREVENT SILTATION FROM CLOGGING/ENTERING WETLANDS.

EXISTING UTLITY NOTES:

1. UTILITY LOCATIONS THAT ARE SHOWN ARE AN ESTIMATE ONLY. OTHERS MAY EXIST WHICH ARE NOT SHOWN ON THE PLAN.
2. THE CONTRACTOR IS TO CALL DIG SAFELY NY AT 811 TO DETERMINE THE LOCATION OF ALL UTILITIES. WHEN IN DOUBT OF A LOCATION HAND DIG TO VERIFY.
3. GAS LINES, WATERLINES, AND STORMWATER LINES MAY EXIST ALONG THE PROPOSED WATER SERVICE TAPS LOCATION. THIS INCLUDES SERVICE LINES AND VALVES.
4. ANY UTILITIES/FACILITIES THAT ARE DAMAGED ARE TO BE REPAIRED TO A LIKE NEW CONDITION ASAP.
5. THE CONTRACTOR IS TO REMOVE ALL CONSTRUCTION DEBRIS, WASTE MATERIALS, ETC. ON A DAILY BASIS SO AS TO KEEP THE SITE CLEAN. IT MAY BE REQUIRED TO USE WATER TO CLEAN AND REMOVE DUST FROM THE STREETS RESULTING FROM THE CONSTRUCTION.

APPROVED UNDER AUTHORITY OF A RESOLUTION ADOPTED

_____

BY THE PLANNING BOARD OF THE TOWN OF MOREAU, NEW YORK

CHAIRPERSON_____

BOARD MEMBER_____

CONSTRUCTION NOTES:

1. PRIOR TO CONSTRUCTION, THE CONTRACTOR SHALL STAKE-OUT ALL IMPROVEMENTS, VERIFY GRADES, AND ANY DISCREPANCIES SHALL BE BROUGHT TO THE IMMEDIATE ATTENTION OF THE ENGINEER. ALL GRADING SHALL BLEND INTO THE SURROUNDING GRADES AT THE EDGE OF THE CONSTRUCTION LIMITS.
2. CONTRACTOR IS RESPONSIBLE TO REPAIR OR REPLACE ALL ITEMS DAMAGED OUTSIDE OF CONSTRUCTION LIMITS, OR ANY DISTURBANCE ON THE SITE WHICH ARE NOT PART OF THE IDENTIFIED WORK OF THIS CONTRACT.
3. CONTRACTOR SHALL VISIT THE SITE TO OBSERVE ALL EXISTING SITE CONDITIONS PRIOR TO THE START OF WORK.
4. CONTRACTOR SHALL OBTAIN ALL NECESSARY APPROVALS AND PERMITS PRIOR TO BEGINNING WORK.
5. CONTRACTOR IS RESPONSIBLE FOR SITE SAFETY DURING CONSTRUCTION. HE SHALL MAINTAIN PROPER SIGNS, BARRICADES, FENCES, TO PROPERLY PROTECT THE WORK, EQUIPMENT, PERSONS AND PROPERTY FROM DAMAGE.
6. CONTRACTOR TO PROVIDE RECORD DRAWINGS FOR ALL UNDERGROUND FACILITIES.
7. ALL EXISTING UTILITY LOCATIONS ARE APPROXIMATE. CONTRACTOR TO FIELD VERIFY. CONTRACTOR TO CONTACT UFPO AS REQUIRED.
8. DURING THE CONSTRUCTION THE STREETS ARE TO REMAIN PASSABLE AT ALL TIMES UNLESS SPECIAL PERMISSION IS GIVEN BY THE TOWN OF MOREAU DPW TO ALLOW CLOSING THEM. TRAFFIC CONTROL IS THE RESPONSIBILITY OF THE CONTRACTOR TO ENSURE THAT THE ROADS ARE SAFE DURING ALL TRAFFIC SITUATIONS.

P.E. LIC. NO.: NY 060166

REV.	DATE:	NOTE:

LANDS OF STEWART & BOVEE
DEVELOPERS & INVESTORS, LLC
SPIER FALLS/OLD SARATOGA ROAD-TOWN OF MOREAU-SARATOGA COUNTY-STATE OF NY

EROSION & SEDIMENT CONTROL & WATER SERVICE DETAILS

DATE: 10/2/20 | SCALE: AS SHOWN | DWG NO.: stewartmoreau.dwg

GARRY ROBINSON, P.E.
CONSULTING ENGINEER

SHEET 2 OF 4