NOTE:
1. SEPTIC TANK TO BE FORT MILLER OR EQUAL. TANK TO BE HEAVY DUTY IF WITHIN TRAFFICED AREA. TANK TO PREFERABLY BE SEAMLESS IF NOT PROVIDE SECURE WATERPROOF JOINTS.
2. PROVIDE 6"–12" OF COVER OVER TANK. PROVIDE EXTENSION COLLAR IF COVER OVER TANK EXCEEDS 12".
3. PROVIDE MIN. 3" PEA STONE OR GRAVEL BASE UNDER SEPTIC TANK.
4. WHERE SEASONAL HIGH GROUNDWATER (SHGW) CAN RISE ABOVE THE TANK BASE, ANCHOR AGAINST FLOTATION AND DO NOT PUMP DURING SHGW PERIOD.
5. IT IS RECOMMENDED THAT MODEL A1801–4x18–VT–B35 ZABEL EFFLUENT FILTER BE PROVIDED ON THE SEPTIC TANK OUTLET. PROVIDE A ZUES RISER AND LID TO ACCESS ZABEL FILTER.
6. LOW PROFILE FIBERGLASS SEPTIC TANK MAY BE USED WHERE CONDITIONS REQUIRE IF APPROVED BY THE DESIGN ENGINEER.

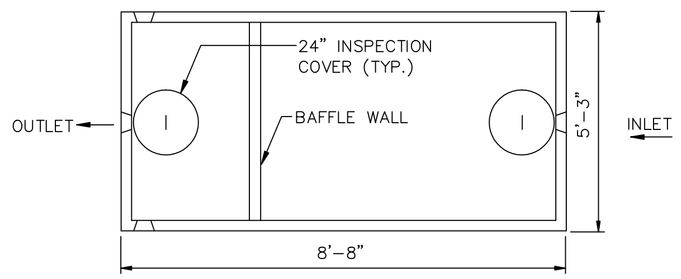

PLAN VIEW

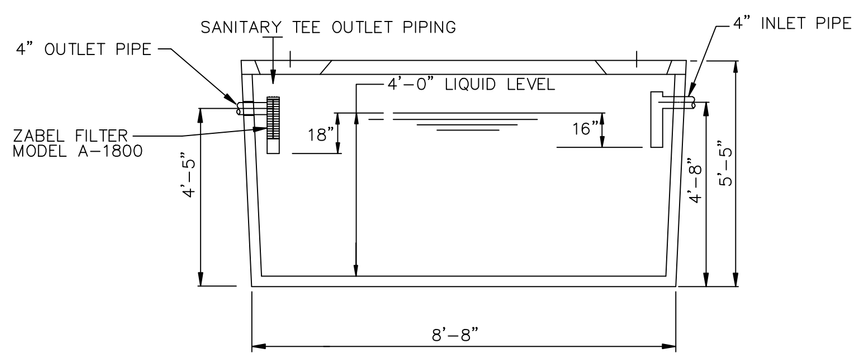

SECTION VIEW

SEPTIC TANK DETAILS - 1000 GAL.

NOT TO SCALE

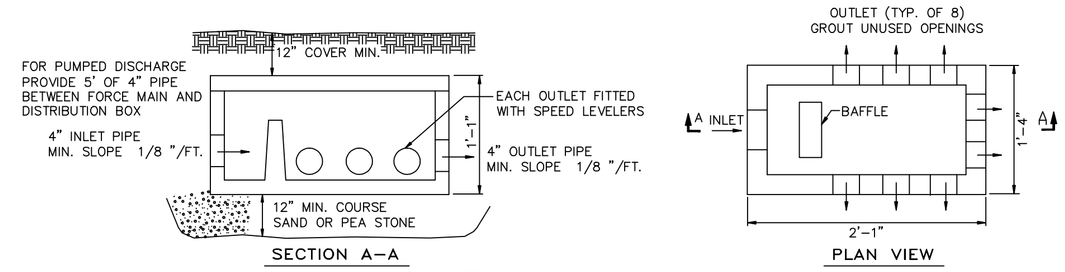

NOTE:
– DISTRIBUTION BOX TO BE NO. 2 DB BY FORT MILLER OR EQUAL.
– PROVIDE EXTENSION COLLAR IF COVER OVER BOX EXCEEDS 12".
– BAFFLE MUST BE PROVIDED. PIPING BENDS TO SERVE AS BAFFLES ARE UNACCEPTABLE.

DISTRIBUTION BOX

NOT TO SCALE

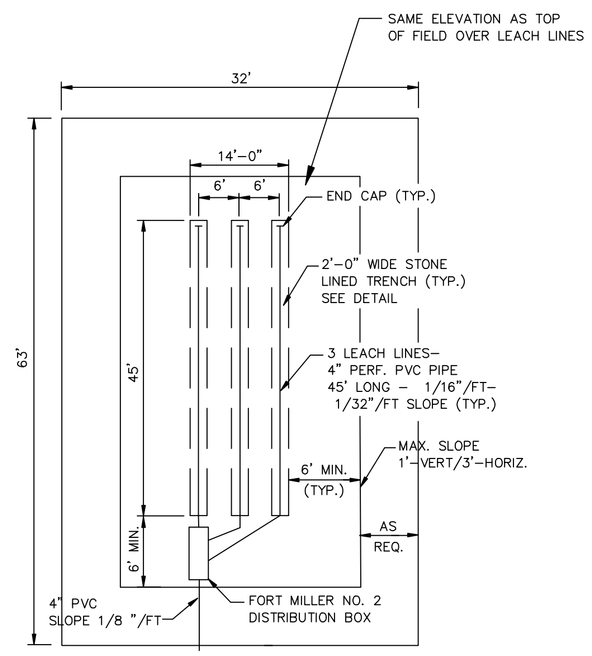

SHALLOW ABSORPTION SYSTEM PLAN

NOT TO SCALE

CONSTRUCTION NOTES – SHALLOW ABSORPTION SYSTEM:

1. PREPARATION OF THE SITE ON WHICH FILL IS TO BE LOCATED AND PLACEMENT OF THE FILL ON THE SITE ARE CRITICAL TO ENSURE PROPER OPERATION OF THE ABSORPTION SYSTEM. EXTREME CARE MUST BE TAKEN TO ASSURE THAT CONSTRUCTION TECHNIQUES DO NOT COMPROMISE THE INTEGRITY OF THE SYSTEM. HEAVY CONSTRUCTION EQUIPMENT MUST NOT BE ALLOWED IN THE AREA OF THE SYSTEM.
2. ALL TREES AND STUMPS SHALL BE CUT AT GRADE AND REMOVED. OTHER VEGETATION SHALL ALSO BE CUT AT GRADE AND REMOVED (GRASS, VINES, ETC.). BOULDERS ABOVE GRADE SHALL BE REMOVED. ROOT STRUCTURE BELOW GRADE NEED NOT BE REMOVED. ROTOTILING OR SOIL SCARIFICATION MUST NOT BE ALLOWED IN THE AREA OF THE SYSTEM.
3. FILL SHOULD BE PLACED ON SITE AS SOON AS IT IS PREPARED. STABILIZE FILL BY MECHANICAL COMPACTION, HOWEVER, DO NOT COMPACT THE ORIGINAL SOILS AS THEY ARE BEING UTILIZED FOR THE TREATMENT. AFTER COMPACTION, CONSTRUCT THE TRENCHES/BED AS USUAL FOR A CONVENTIONAL SYSTEM. THE SYSTEM SHALL BE INSTALLED PARTIALLY IN THE EXISTING SOILS AS PER THE DETAILS ON THE PLAN WITH A MINIMUM OF 6" OF THE TRENCH IN THE IN SITU SOILS.
4. AFTER THE TRENCHES HAVE BEEN CONSTRUCTED AND BACKFILLED, THE ENTIRE SURFACE OF THE ABSORPTION SYSTEM SHALL BE COVERED WITH 6" OF TOPSOIL SLOPED OVER THE SYSTEM TO PROMOTE RUNOFF (SLOPE OF GREATER THAN 1%) OFF THE FILL AREA. THEN SEED WITH GRASS MIXTURE. MAINTAIN AS NECESSARY TO KEEP GRASS HEALTHY.
5. APPROPRIATE SURFACE DRAINAGE DITCHES SHALL BE CONSTRUCTED UP SLOPE FROM THE SYSTEM TO DRAIN SURFACE WATER AWAY FROM THE FILL.
6. FILL, AFTER PLACEMENT ON SITE, SHALL HAVE A PERCOLATION RATE OF LESS THAN 8 MIN/INCH AND MORE THAN 3 MIN/INCH. PERCOLATION TESTS TO CONFIRM THE FILLS ACCEPTABILTY ARE TO BE RUN AT THE SITE BY THE OWNER/CONTRACTOR.

SEWAGE DISPOSAL SYSTEM NOTES:

1. THIS PROJECT IS FOR ONSITE SEPTIC SYSTEMS FOR A PROPOSED THREE LOT SUBDIVISION. EACH SYSTEM WILL CONSIST OF A SEPTIC TANK, A DISTRIBUTION BOX AND IT IS PROJECTED TO BE A SHALLOW FILL CONVENTIONAL LEACHING SYSTEM. ONCE HOMES ARE PROPOSED FOR THE LOTS, AN INDIVIDUAL ONSITE SEPTIC SYSTEM WILL BE DESIGNED BASED ON THE DATA PROVIDED FROM ONE DEEP TEST PIT AND TWO PERCOLATION TESTS. THESE WILL BE SUBMITTED TO THE BUILDING INSPECTOR FOR APPROVAL. LOT 3 IS A COMMERCIAL LOT AND A SYSTEM WILL BE DESIGNED AT SUCH TIME A COMMERCIAL USE IS PLANNED.

2. SEWAGE FLOWS: 3 BEDROOM HOME @ 110 GAL/DAY/BEDROOM TOTAL=330 GPD
3. SEPTIC TANK SIZING BASED ON THREE BEDROOMS IS 1000 GALLONS.

4. CONVENTIONAL LEACH FIELD DESIGN BASED ON NYSDOH RESIDENTIONAL ONSITE WASTEWATER TREATMENT SYSTEMS DESIGN HANDBOOK DATED 2012. PERCOLATION RATE=1–5 MIN/INCH. DESIGN LOADING RATE=1.2 GPD/SF. 280 SF OF ABSORPTION AREA IS NEEDED. UTILIZING 2 FT. WIDE TRENCHES (280/2) AND 3 LEACH LINE LATERALS EACH LATERAL WILL BE 45 FEET IN LENGTH. LEACH SYSTEM SIZE TO BE 14'x47'.

5. CONTRACTOR AT ALL TIMES SHALL COMPLY WTH THE REQUIREMENTS OF THE NYSDOH REGULATIONS CONTAINED IN APPENDIX 75A–WASTEWATER TREATMENT STANDARDS FOR INDIVIDUAL HOUSEHOLD SYSTEMS AND THE NYSDOH PUBLICATION "RESIDENTIAL ONSITE WASTEWATER TREATMENT SYSTEM DESIGN HANDBOOK."

6. BASE MAPPING HAS BEEN GENERATED FROM A SURVEY WHICH IS INCLUDED AS SHEET 1.

7. PROVIDE A SURFACE DRAINAGE SWALE AROUND THE ABSORPTION SYSTEM TO DIVERT RUNOFF AWAY FROM THE SYSTEM. INSTALL NO CLOSER THAN 25' FROM THE UPHILL EDGE OF THE SYSTEM.

8. OWNER SHALL NOT ALLOW ANY CLEAR WATER DISCHARGES SUCH AS A SUMP PUMP OR ROOF DRAINS TO BE DIRECTED TO THE SEPTIC SYSTEM AS IT WILL CAUSE SYSTEM FAILURE.

9. NO STRUCTURES SUCH AS SHEDS, POOLS, BARNS, ETC. ARE TO BE CONSTRUCTED WITHIN 5' OR ON TOP OF THE SEPTIC SYSTEM. ALL TRAFFIC OR ANY USE THAT MAY CAUSE COMPACTION OF THE SOILS OR MAY CAUSE THE COLLAPSE OF THE LEACHING SYSTEM COMPONENTS MUST BE DIVERTED FROM THE LEACHING SYSTEM AREA.

10. THE CONTRACTOR IS TO SECURE ALL REQUIRED PERMITS FOR THE THE PROJECT.

11. CONTRACTOR RESPONSIBLE FOR ALL OSHA REGULATIONS AND REQUIREMENTS. THEY ARE ALSO RESPONSIBLE FOR SITE SAFETY.

12. ALL WORK MUST CONFORM TO ALL APPLICABLE FEDERAL STATE AND LOCAL CODES, SPECIFICATIONS, ORDINANCES, RULES AND REGULATIONS.

13. ALL UTILITY LOCATIONS IS SHOWN ARE APPROXIMATE. CONTRACTOR TO FIELD VERIFY UTILITY LOCATIONS. CONTRACTOR TO CONTACT DIG SAFELY NY AS REQUIRED AT 811. NO UNDERGROUND WORK SHALL BE COMPLETED UNTIL UTILITIES ARE LOCATED.

14. CONTRACTOR TO PROVIDE RECORD DRAWINGS FOR THIS ONSITE SEWAGE DISPOSAL SYSTEM TO THE TOWN OF MOREAU BUILDING DEPARTMENT.

15. ALL REFUSE DEBRIS AND MISCELLANEOUS ITEMS ARE TO BE REMOVED FROM THE SITE AT THE COMPLETION OF THE PROJECT. CONTRACTOR TO DISPOSE OF LEGALLY OFF SITE.

16. ALL POINTS OF CONSTRUCTION INGRESS AND OR EGRESS SHALL BE MAINTAINED TO PREVENT TRACKING OR FLOWING OF SEDIMENT OR DEBRIS ON A PUBLIC ROAD OR ON THE PAVED SURFACES OF THE SITE.

17. CONTRACTOR TO COMPLY WITH ANY PROJECT SPECIFIC SWPPP. CONTRACTOR TO FOLLOW GUIDELINES AS PROVIDED IN THE "NYS GUIDELINES FOR URBAN EROSION AND SEDIMENT CONTROL" (THE BLUE BOOK–ITS MOST RECENT UPDATE).

18. CONTRACTOR TO COMPLY WITH ANY NYSDEC, ACOE OR OTHER GOVERNMENTAL AGENCIES PERMITS THAT MAY BE APPLICABLE TO THE ONSITE SEPTIC SYSTEMS WORK.

19. EXISTING SEPTIC SYSTEMS IF SHOWN ARE BASED ON CONVERSATIONS WITH THE OWNER OR NEIGHBORS. THEY INDICATE THE RELATIVE LOCATION OF THE VARIOUS SYSTEMS BUT ARE NOT INTENDED TO SHOW EXACT LOCATIONS OR TYPES/SIZES OF SYSTEMS AS THEY ARE NORMALLY UNKNOWN.

20. SOME LEACHING SYSTEMS REQUIRE THAT A SPECIFIC EFFLUENT FILTER BE PROVIDED IN THE SEPTIC TANK OUTLET LINE IN ORDER TO VALIDATE THE THE WARRANTY AND KEEP IT IN FORCE. THESE INCLUDE AMONG OTHERS ELJEN GSF SYSTEMS, ANUA PUR–A–FLO PEAT FIBER SYSTEMS. EFFLUENT FILTERS REMOVE SOLIDS THAT MIGHT PASS THROUGH THE SEPTIC TANK AND CONTINUE INTO THE LEACHING SYSTEM CAUSING IT TO FAIL. THEY REQUIRE ROUTINE MAINTENANCE (SEE NOTES ON THIS PLAN) TO OPERATE PROPERLY. A BACK UP FROM A CLOGGED EFFLUENT FILTER IS NOT A FAILURE. IT MERELY INDICATES THAT IT DID ITS JOB AND NOW NEEDS MAINTENANCE. AN EFFLUENT FILTER IS RECOMMENDED ON ALL SYSTEMS.

21. A PROFESSIONAL ENGINEER SHALL PERFORM INSPECTION OF THE SYSTEM CONSTRUCTION AT THE FOLLOWING TIMES IN ORDER TO BE ABLE TO CERTIFY THAT IT WAS INSTALLED PROPERLY: HOUSE LATERAL, ST, PIPING TO DB, DB, PS, LATERALS EXPOSED FOR INSPECTION. 48 HOUR NOTICE IS REQUIRED AS WELL AS A FEE. THIS DOES NOT CONSTITUTE FULL TIME INSPECTION OR PROJECT SUPERVISION. THESE ARE AVAILABLE FOR AN ADDITIONAL FEE. ENGINEER TO PROVIDE A CERTIFICATION OF INSPECTION INDICATING IF THE SYSTEM IS IN SUBSTANTIAL ACCORDANCE WITH THE PLANS WILL BE PROVIDED.

22. NO WATER SUPPLY WELLS EXIST WITHIN 100 FEET OF THE LEACHING SYSTEM.

23. GRAVITY PIPING IS TO BE PVC SDR 21 OR SCH 40.

24. ONSITE SEPTIC SYSTEMS AND HOUSE LOCATION ARE SHOWN TO INDICATE THE LOTS ARE BUIDABLE. A DIFFERENT LAYOUT MAY BE UTILIZED IF ALL APPLICABLE REQUIREMENTS OF THE TOWN AND NYSDOH ARE MET.

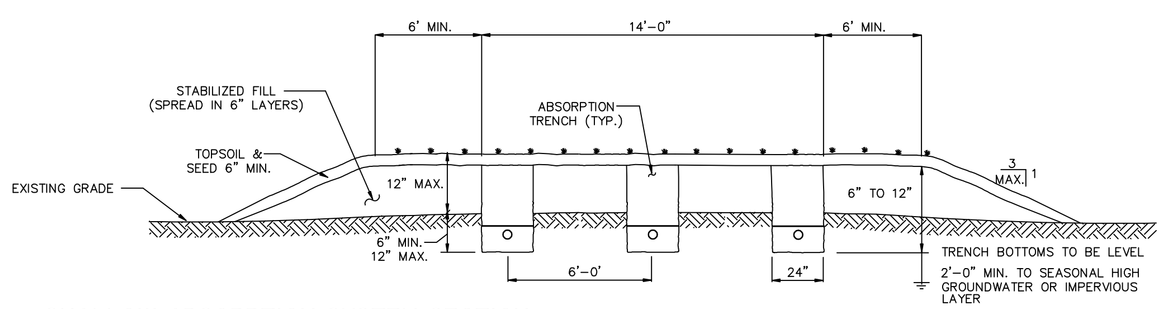

SHALLOW ABSORPTION SYSTEM SECTION

NOT TO SCALE

A NOTE ABOUT EFFLUENT FILTERS AND WIPES

THE USE OF AN EFFLUENT FILTER IS HIGHLY RECOMMENDED. AN EFFLUENT FILTER PROVIDES ANOTHER CHANCE TO REMOVE SOLIDS FROM THE WASTE STREAM PRIOR TO THEM ENTERING THE DISTRIBUTION BOX AND CAUSING PROBLEMS WITH THE LEACHING SYSTEM. DO NOT REMOVE IT ACCEPT FOR CLEANING. WHEN CLEANING PULL THE FILTER OUT BUT DO NOT PUT FILTERED MATERIAL BACK IN THE TANK. PUT THE FILTER IN A HEAVY DUTY GARBAGE BAG, SHAKE THE FILTER THEN SPRAY IT WITH THE HOSE TO CLEAN IT. THROW OUT THE GARBAGE BAG AND PLACE THE CLEAN EFFLUENT FILTER BACK IN THE EFFLUENT TEE BAFFLE. HAVE YOUR CONTRACTOR SHOW YOU HOW TO FIND THE EFFLUENT FILTER.
WIPES, BABY WIPES, TAMPONS, KOTEX, ETC. THESE ITEMS DO NOT BELONG IN THE SEPTIC SYSTEM. THEY EXPAND AND THEN CLOG PIPING, THE EFFLUENT FILTER AND IF THEY GET THERE, THE DISTRIBUTION BOX & POTENTIALLY THE LEACHING SYSTEM.
IF YOUR EFFLUENT FILTER OR OTHER SYSTEM COMPONENTS ARE CLOGGED YOU MAY NOTICE THAT THE TOILET IS SLUGGISH AND YOU MAY HEAR SOME GURGLING WHEN IT FLUSHES. IF THIS OCCURS CLEAN YOUR EFFLUENT FILETER AND IT SHOULD TAKE CARE OF THE SITUATION. IF IT DOES NOT YOU MAY HAVE OTHER ISSUES THAT REQUIRE THE HELP OF A PROFESSIONAL.

SYSTEM MAINTENANCE NOTES – ON SITE SYSTEM:

IT IS IMPERATIVE THAT THE OWNER PROVIDE QUALITY MAINTENANCE FOR THIS SYSTEM. SEND AS LITTLE GREASE AS POSSIBLE TO HOUSE DRAINS. CLEAN ZABEL FILTER EVERY 3 MONTHS TO START. IF FILTER IS NOT DIRTY GO TO 4 MONTHS, ETC. UNTIL THE RIGHT CLEANING FREQUENCY IS DETERMINED. DO NOT LET GO MORE THAN 12 MONTHS WITHOUT CLEANING. TO CLEAN REMOVE STRAINER & HOSE CLEAN THEN REPLACE. MONITOR SEPTIC TANK AND CLEAN TANK WHEN THE DEPTH TO THE SLUDGE LAYER IS 10" BELOW THE BOTTOM OF THE OUTLET BAFFLE AND/OR THE DEPTH FROM THE BOTTOM OF THE SCUM LAYER IS 3" ABOVE THE BOTTOM OF THE OUTLET BAFFLE. AT A MINIMUM PUMP EVERY 3–5 YEARS. IF PROBLEMS OCCUR IN THE SEPTIC SYSTEM, ADDRESS THEM QUICKLY AS THEY CAN RENDER THE SYSTEM USELESS AND CAUSE IT TO FAIL.

CONTRACTOR NOTIFICATION:

THE CONTRACTOR SHALL CONTACT THE DESIGN ENGINEER PRIOR TO THE START OF CONSTRUCTION TO ENSURE COMPLETE UNDERSTANDING OF SYSTEM DESIGN INTENT.
IF DIFFERING SITE CONDITIONS FROM THOSE PRESENTED IN THIS PLAN ARE ENCOUNTERED, THE CONTRACTOR SHALL CONTACT THE DESIGN ENGINEER IMMEDIATELY PRIOR TO ANY FURTHER WORK BEING COMPLETED.

GARRY ROBINSON, P.E. PHONE: 518–695–3655
EMAIL: grobinsonpe@gmail.com

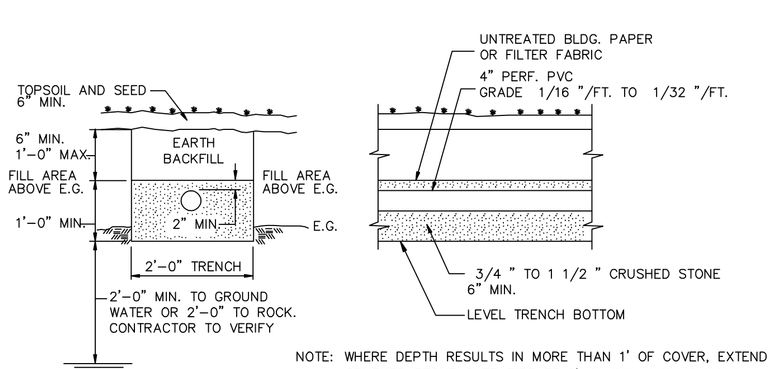

NOTE: WHERE DEPTH RESULTS IN MORE THAN 1' OF COVER, EXTEND CRUSHED STONE OVER PIPE TO 1' BELOW FINISHED GRADE

SHALLOW ABSORPTION SYSTEM TRENCH DETAIL

NOT TO SCALE

APPROVED UNDER AUTHORITY OF A RESOLUTION ADOPTED

_____

BY THE PLANNING BOARD OF THE TOWN OF MOREAU, NEW YORK

CHAIRPERSON_____

BOARD MEMBER_____

P.E. LIC. NO. NY–060166	REV.	DATE:	NOTE:

LANDS OF STEWART & BOVEE
DEVELOPERS & INVESTORS, LLC
SPIER FALLS/OLD SARATOGA ROAD–TOWN OF MOREAU–SARATOGA COUNTY–STATE OF NY

ONSITE SEWAGE DISPOSAL SYSTEM DETAILS

DATE: 10–2–20 | SCALE: AS SHOWN | DWG. NO.: stewartmoreau.dwg

GARRY ROBINSON, P.E.
CONSULTING ENGINEER

SHEET 4 OF 4